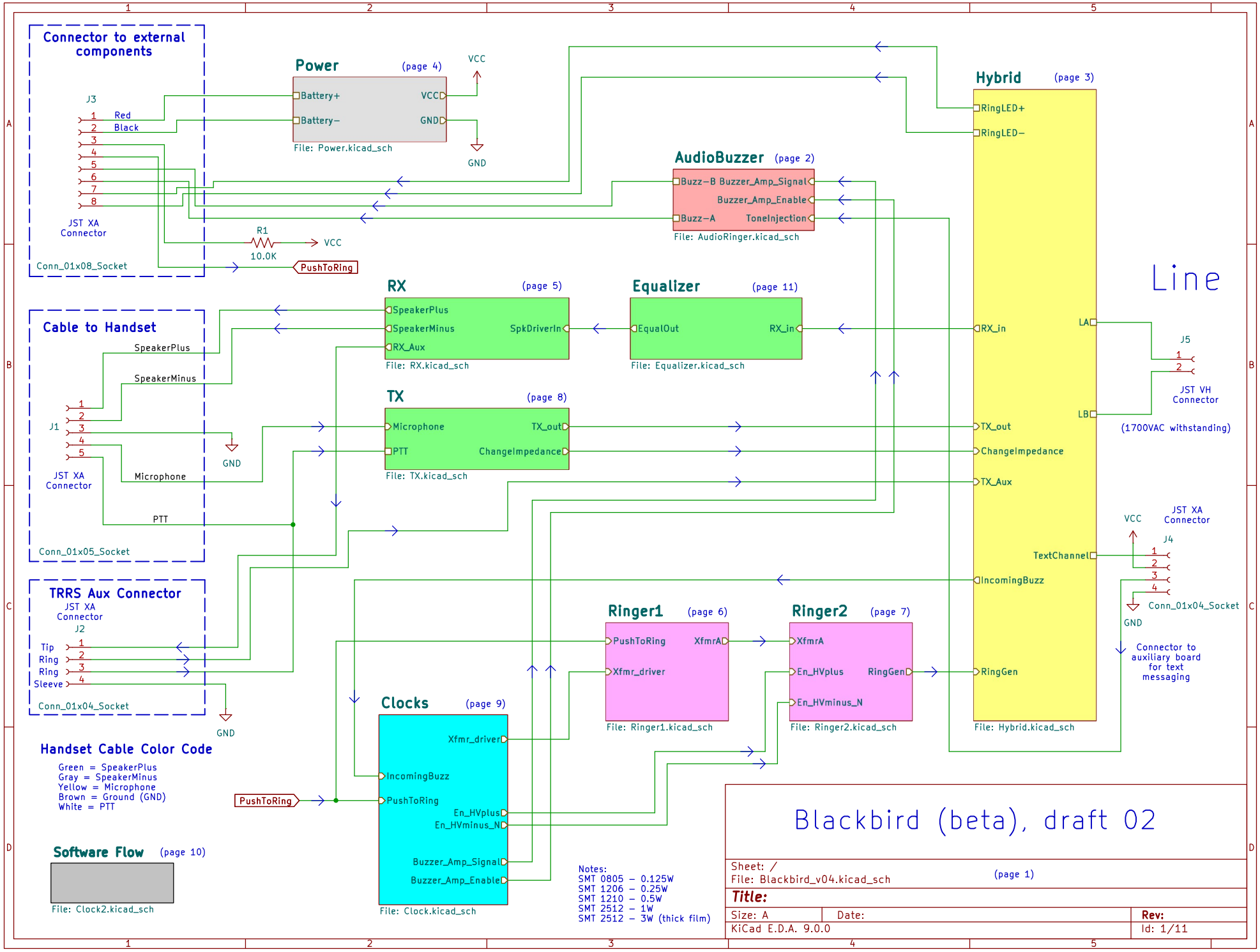
Connector to external components
J3
Red
Black
JST XA Connector
Conn_01x08_Socket
Power (page 4)
Battery+
Battery−
VCC
GND
File: Power.kicad_sch
R1
10.0K
PushToRing
AudioBuzzer (page 2)
Buzz−B
Buzz−A
Buzzer_Amp_Signal
Buzzer_Amp_Enable
ToneInjection
File: AudioRinger.kicad_sch
Hybrid (page 3)
RingLED+
RingLED−
RX_in
TX_out
ChangeImpedance
TX_Aux
IncomingBuzz
RingGen
TextChannel
LA
LB
File: Hybrid.kicad_sch
Line
J5
JST VH Connector
(1700VAC withstanding)
Cable to Handset
SpeakerPlus
SpeakerMinus
Microphone
PTT
J1
JST XA Connector
Conn_01x05_Socket
GND
RX (page 5)
SpeakerPlus
SpeakerMinus
RX_Aux
SpkDriverIn
File: RX.kicad_sch
Equalizer (page 11)
EqualOut
RX_in
File: Equalizer.kicad_sch
TX (page 8)
Microphone
PTT
TX_out
ChangeImpedance
File: TX.kicad_sch
VCC
JST XA Connector
J4
Conn_01x04_Socket
GND
Connector to auxiliary board for text messaging
TRRS Aux Connector
JST XA Connector
J2
Tip
Ring
Ring
Sleeve
Conn_01x04_Socket
GND
Ringer1 (page 6)
PushToRing
Xfmr_driver
XfmrA
File: Ringer1.kicad_sch
Ringer2 (page 7)
XfmrA
En_HVplus
En_HVminus_N
RingGen
File: Ringer2.kicad_sch
Clocks (page 9)
Xfmr_driver
IncomingBuzz
PushToRing
En_HVplus
En_HVminus_N
Buzzer_Amp_Signal
Buzzer_Amp_Enable
File: Clock.kicad_sch
Handset Cable Color Code
Green = SpeakerPlus
Gray = SpeakerMinus
Yellow = Microphone
Brown = Ground (GND)
White = PTT
Software Flow (page 10)
File: Clock2.kicad_sch
Notes:
SMT 0805 – 0.125W
SMT 1206 – 0.25W
SMT 1210 – 0.5W
SMT 2512 – 1W
SMT 2512 – 3W (thick film)
Blackbird (beta), draft 02
Sheet: /
File: Blackbird_v04.kicad_sch
(page 1)
Title:
Size: A
Date:
Rev:
KiCad E.D.A. 9.0.0
Id: 1/11

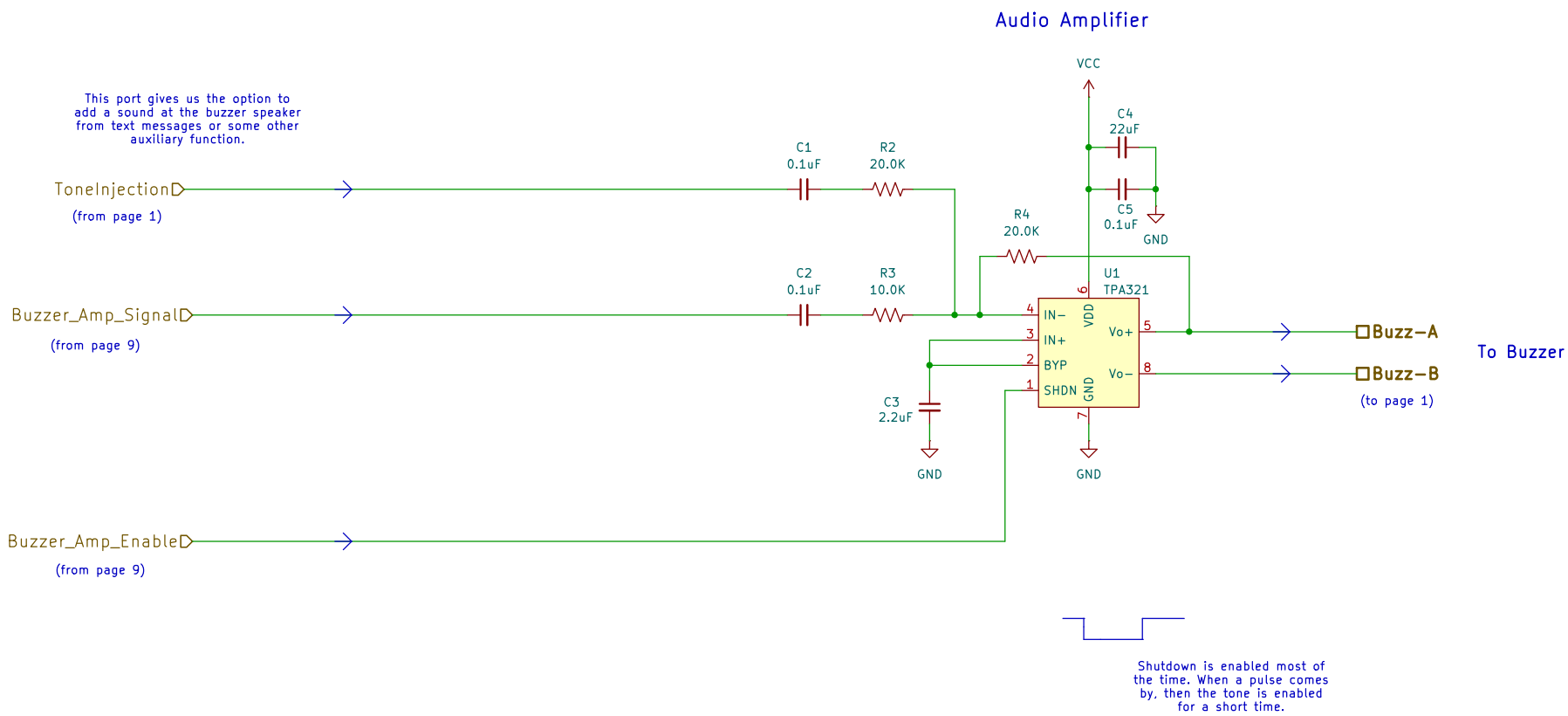

Unless noted otherwise, all resistors are 0805 SMD, 1%.
Capacitors are 0805 SMD.

Audio Ringer

Sheet: /AudioBuzzer/
File: AudioRinger.kicad_sch (page 2)

Title:

Size: A	Date:	Rev:
KiCad E.D.A. 9.0.0		Id: 2/11

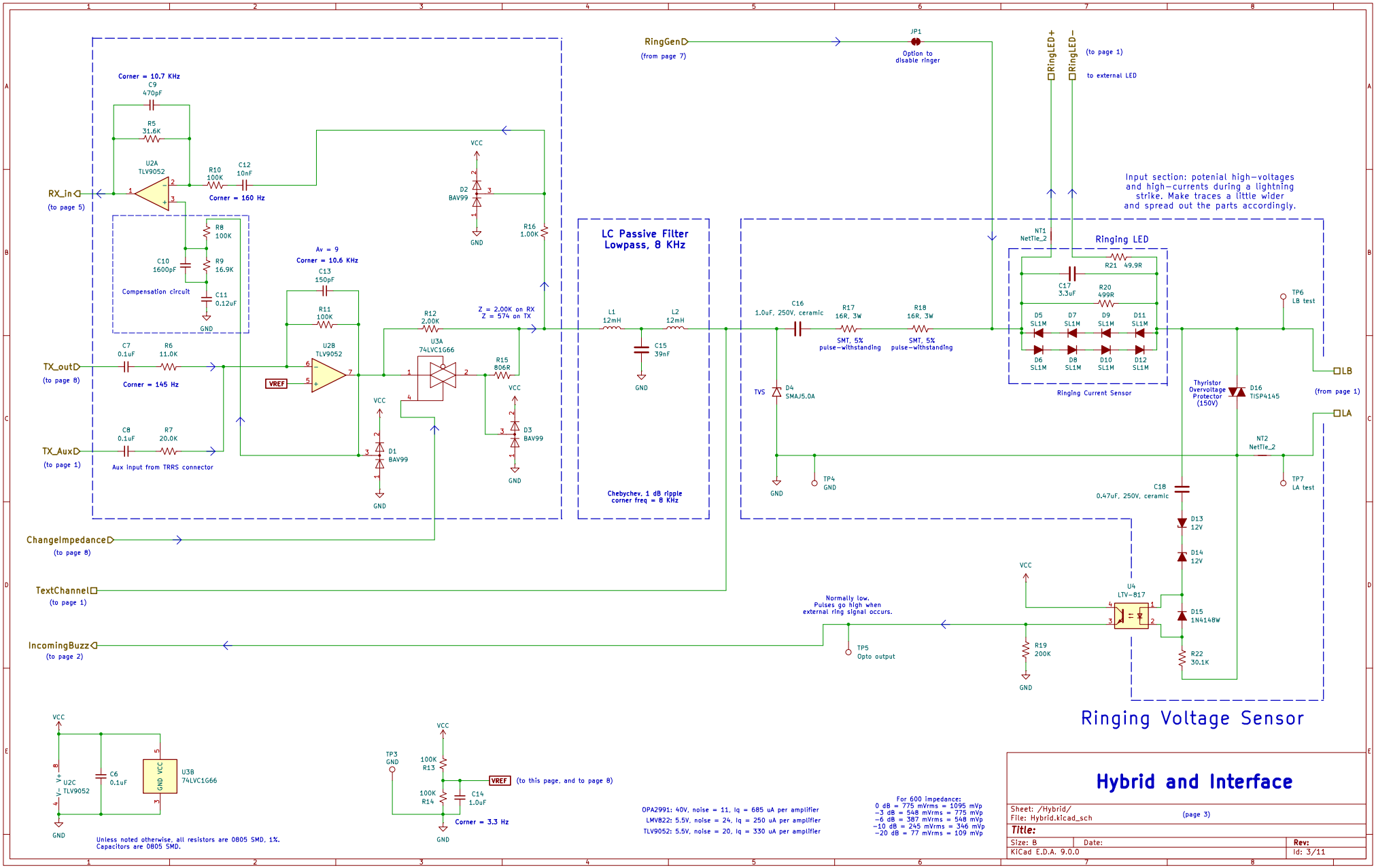
RX_in
(to page 5)
Corner = 10.7 KHz
C9
470pF
R5
31.6K
U2A
TLV9052
R10
100K
C12
10nF
Corner = 160 Hz
R8
100K
C10
1600pF
R9
16.9K
C11
0.12uF
Compensation circuit
GND
Av = 9
Corner = 10.6 KHz
C13
150pF
R11
100K
U2B
TLV9052
VREF
TX_out
(to page 8)
C7
0.1uF
R6
11.0K
Corner = 145 Hz
TX_Aux
(to page 1)
C8
0.1uF
R7
20.0K
Aux input from TRRS connector
VCC
D2
BAV99
R16
1.00K
R12
2.00K
U3A
74LVC1G66
Z = 2.00K on RX
Z = 574 on TX
R15
806R
D3
BAV99
D1
BAV99
ChangeImpedance
(to page 8)
TextChannel
(to page 1)
IncomingBuzz
(to page 2)
RingGen
(from page 7)
JP1
Option to
disable ringer
LC Passive Filter
Lowpass, 8 KHz
L1
12mH
L2
12mH
C15
39nF
Chebychev, 1 dB ripple
corner freq = 8 KHz
RingLED+
RingLED−
(to page 1)
to external LED
Input section: potenial high-voltages
and high-currents during a lightning
strike. Make traces a little wider
and spread out the parts accordingly.
NT1
NetTie_2
Ringing LED
R21 49.9R
C17
3.3uF
R20
499R
D5 SL1M
D7 SL1M
D9 SL1M
D11 SL1M
D6 SL1M
D8 SL1M
D10 SL1M
D12 SL1M
Ringing Current Sensor
C16
1.0uF, 250V, ceramic
R17
16R, 3W
SMT, 5%
pulse-withstanding
R18
16R, 3W
SMT, 5%
pulse-withstanding
TVS
D4
SMAJ5.0A
TP4
GND
TP6
LB test
LB
(from page 1)
LA
Thyristor
Overvoltage
Protector
(150V)
D16
TISP4145
NT2
NetTie_2
TP7
LA test
C18
0.47uF, 250V, ceramic
D13
12V
D14
12V
D15
1N4148W
R22
30.1K
U4
LTV-817
R19
200K
Normally low.
Pulses go high when
external ring signal occurs.
TP5
Opto output
Ringing Voltage Sensor
U2C
TLV9052
C6
0.1uF
U3B
74LVC1G66
Unless noted otherwise, all resistors are 0805 SMD, 1%.
Capacitors are 0805 SMD.
TP3
GND
100K
R13
100K
R14
C14
1.0uF
Corner = 3.3 Hz
(to this page, and to page 8)
OPA2991: 40V, noise = 11, Iq = 685 uA per amplifier
LMV822: 5.5V, noise = 24, Iq = 250 uA per amplifier
TLV9052: 5.5V, noise = 20, Iq = 330 uA per amplifier
For 600 impedance:
0 dB = 775 mVrms = 1095 mVp
−3 dB = 548 mVrms = 775 mVp
−6 dB = 387 mVrms = 548 mVp
−10 dB = 245 mVrms = 346 mVp
−20 dB = 77 mVrms = 109 mVp
Hybrid and Interface
Sheet: /Hybrid/
File: Hybrid.kicad_sch
(page 3)
Title:
Size: B
Date:
Rev:
KiCad E.D.A. 9.0.0
Id: 3/11

Power can come from three AA batteries or one Li-on 18650 cell.
* Three alkaline AA batteries have a nominal voltage of 4.5V (max 4.8V).
* Three lithium AA batteries (primary, not rechargeable) have a new voltage of 5.4V
* 18650 cell has nominal voltage of 4.2 fully charged, 3.7V nominal.
* All cells has a minimum voltage of 3.0V

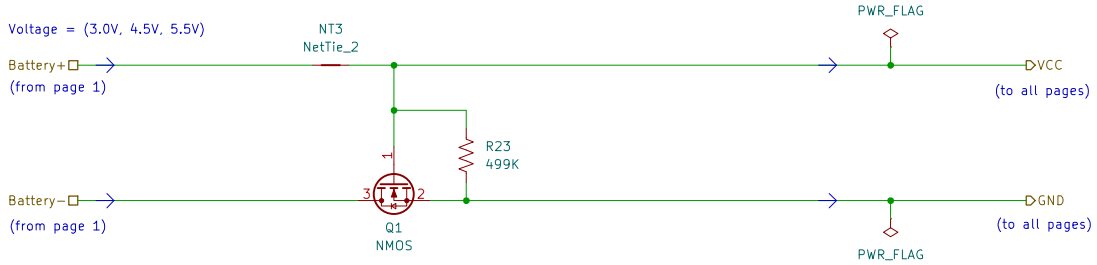

Reverse-battery protection

Unless noted otherwise, all resistors are 0805 SMD, 1%.
Capacitors are 0805 SMD.

Power

Sheet: /Power/
File: Power.kicad_sch
(page 4)

Title:

Size: A4	Date:	**Rev:**
KiCad E.D.A. 9.0.0		Id: 4/11

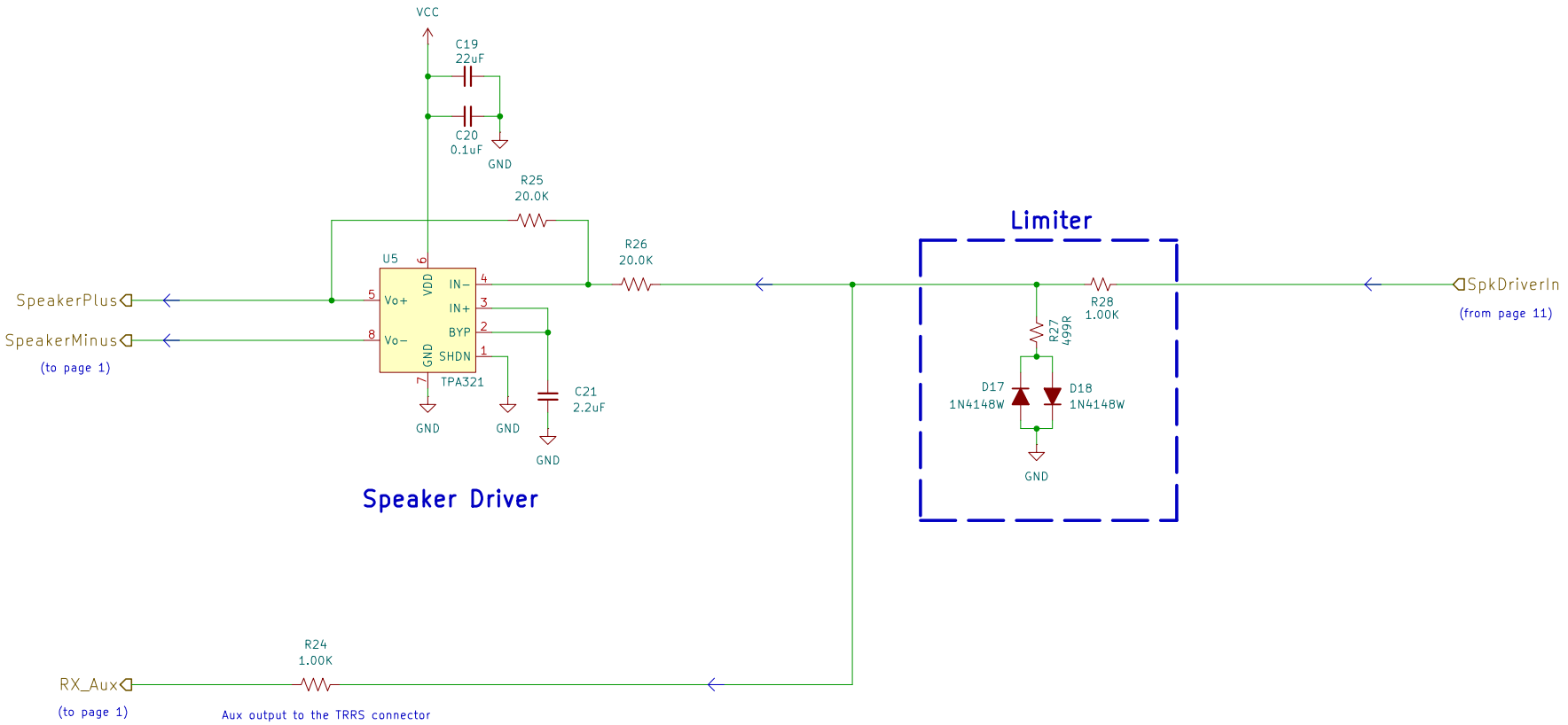

TPA321: Iq = 0.7mA (typ), 1.5mA (max)

TPA6111A2: Iq = 1.6 mA (typ), 3.2 mA (max)

LM4880: Iq = 3.6 mA (typ), 6.0 mA (max)

TPA6211A1: Iq = 4.0 ma (typ), 5.0 mA (max)

Unless noted otherwise, all resistors are 0805 SMD, 1%.
Capacitors are 0805 SMD.

RX: Equalizer to Speaker

Sheet: /RX/
File: RX.kicad_sch

(page 5)

Title:

Size: A4	Date:	**Rev:**
KiCad E.D.A. 9.0.0		Id: 5/11

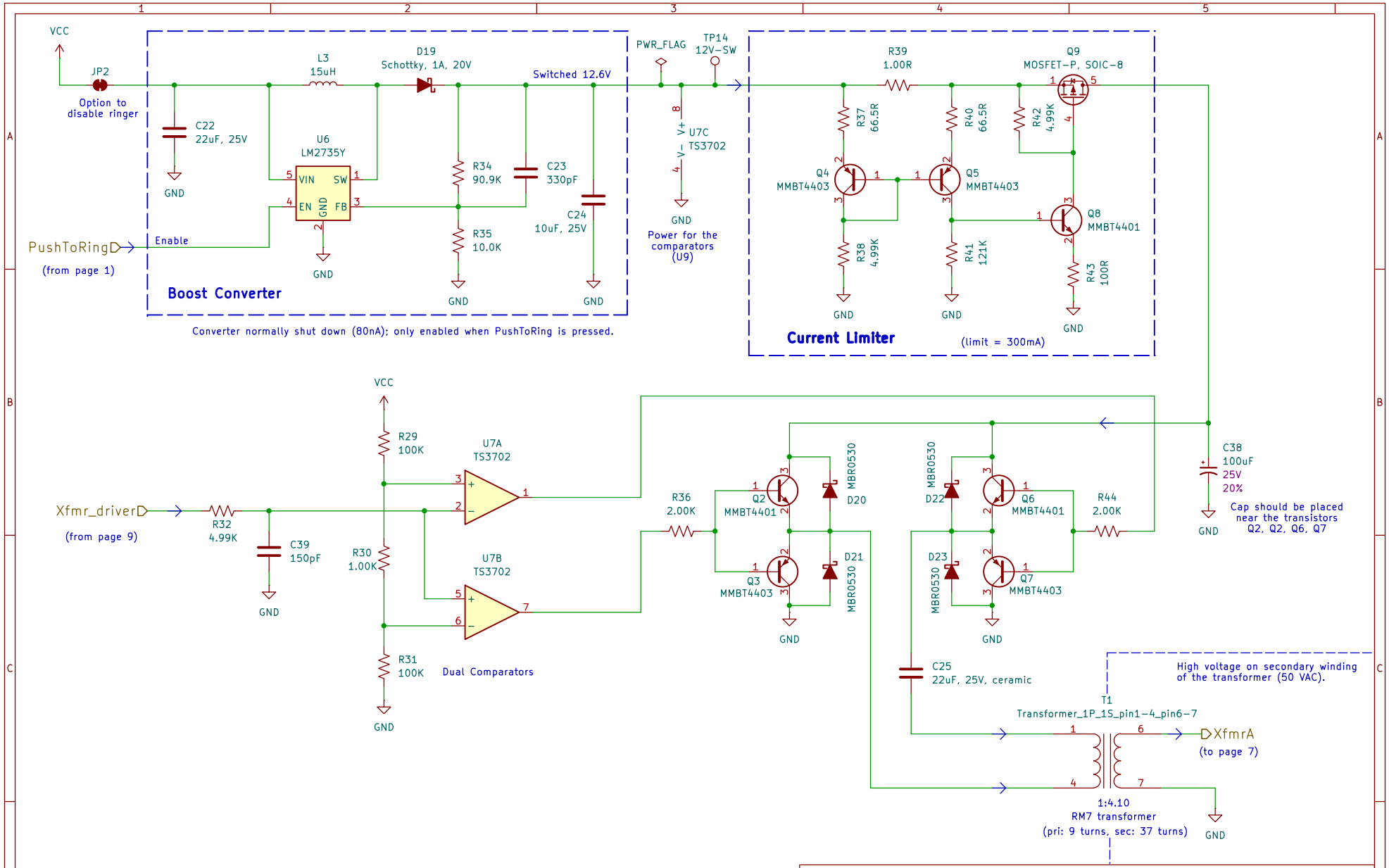

Ringer1 Circuit

Sheet: /Ringer1/
File: Ringer1.kicad_sch
(page 6)

Title:

Size: A | Date: | Rev:
KiCad E.D.A. 9.0.0 | Id: 6/11

Unless noted otherwise, all resistors are 0805 SMD, 1%.
Capacitors are 0805 SMD.

LM358A: Iq = 0.7 mA (typ), 1.20 mA (max), $0.23

TS3702 comparator: Iq = 14 uA (typ), 50 uA (max), $0.66

Ring Generator Output Stage

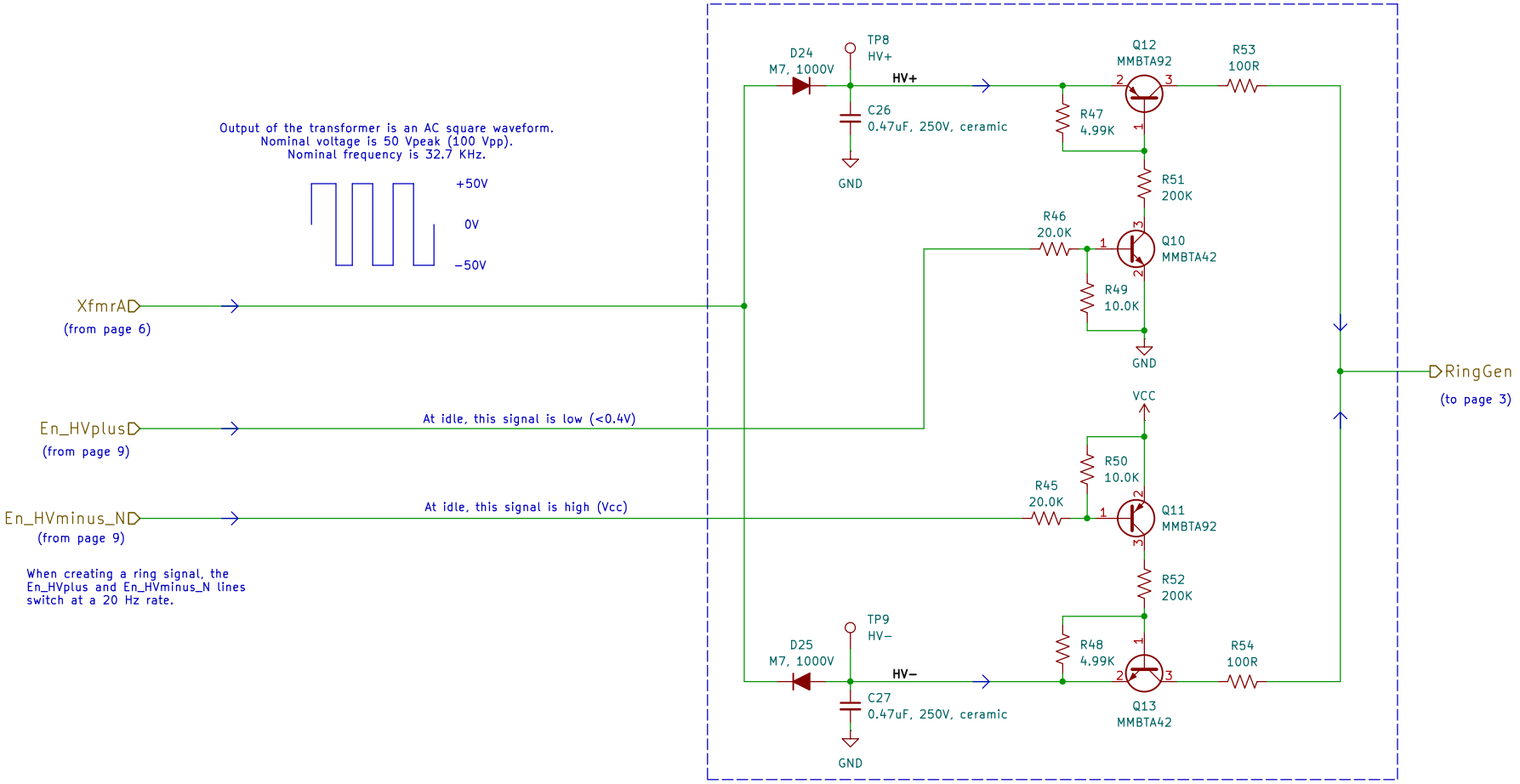

Output voltage designed for 50 VAC maximum
as per UL and IEC TS 60479-1.

High Voltages on this page!

Unless noted otherwise, all resistors are 0805 SMD, 1%.
Capacitors are 0805 SMD.

Ringer2 Circuit

Sheet: /Ringer2/
File: Ringer2.kicad_sch
(page 7)

Title:

Size: A	Date:	Rev:
KiCad E.D.A. 9.0.0		Id: 7/11

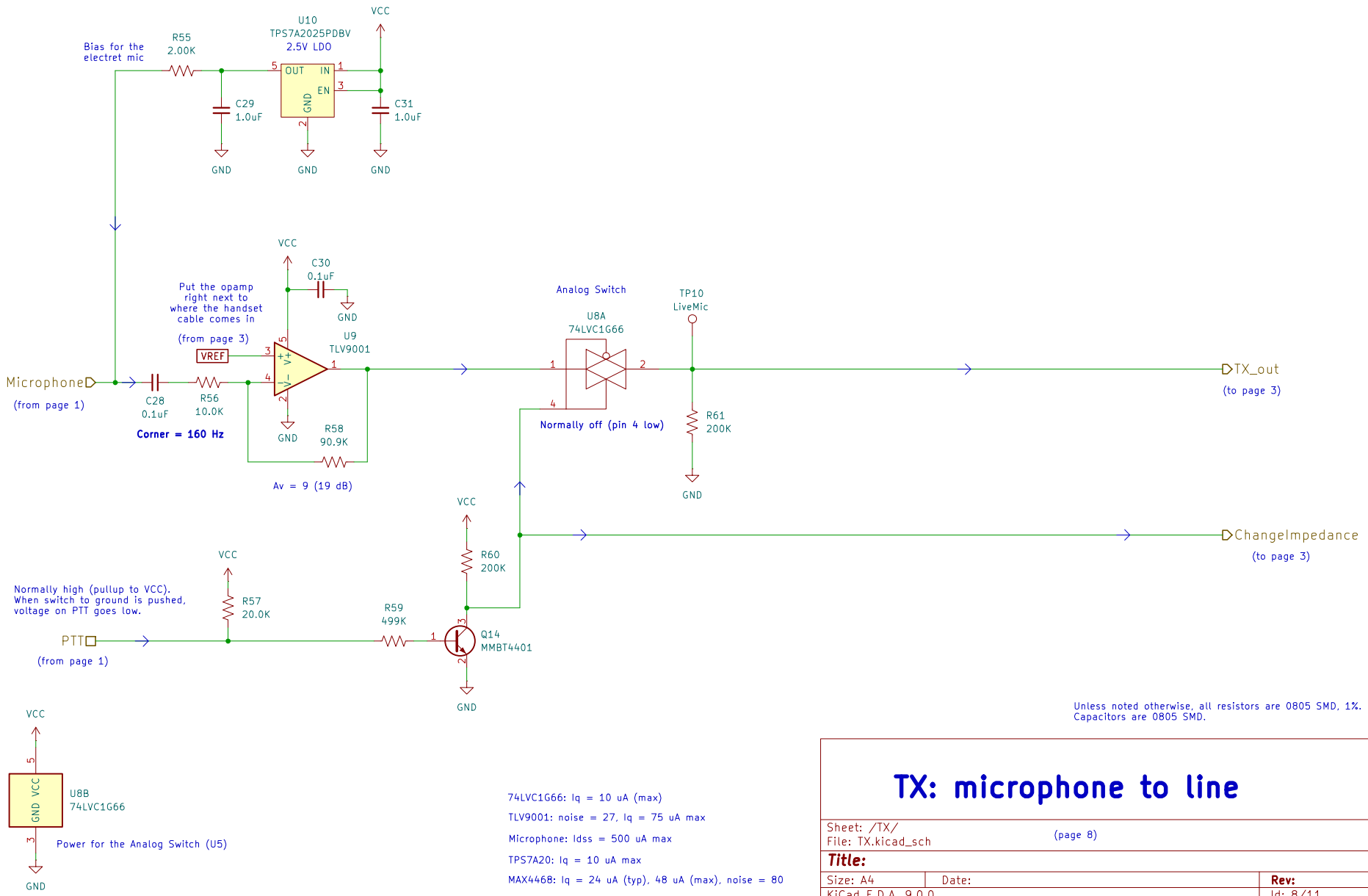

TX: microphone to line

Sheet: /TX/
File: TX.kicad_sch

(page 8)

Title:

Size: A4	Date:	**Rev:**
KiCad E.D.A. 9.0.0		Id: 8/11

The page "Software Flow" explains
the functions implemented in the processor.

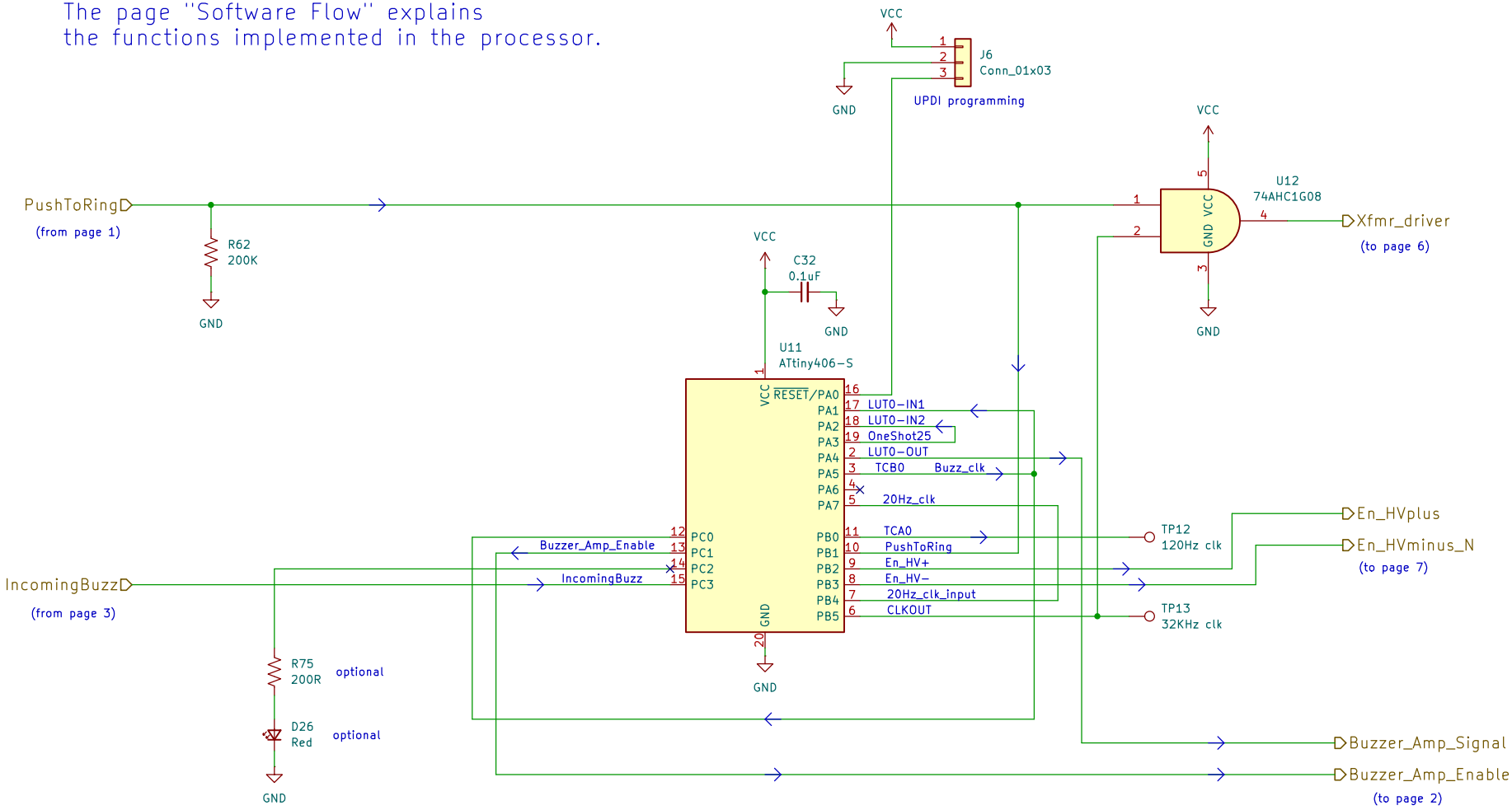

Unless noted otherwise, all resistors are 0805 SMD, 1%.
Capacitors are 0805 SMD.

32 KHz oscillator on ATtiny 406: (one sample)
Vcc 3.0V => 32.59 KHz
Vcc 4.5V => 32.93 KHz
Vcc 4.8V => 33.12 KHz
Therefore we can count on a frequency
stability of +/- 1%.

Clocks

Sheet: /Clocks/
File: Clock.kicad_sch

(page 9)

Title:

Size: A	Date:	Rev:
KiCad E.D.A. 9.0.0		Id: 9/11

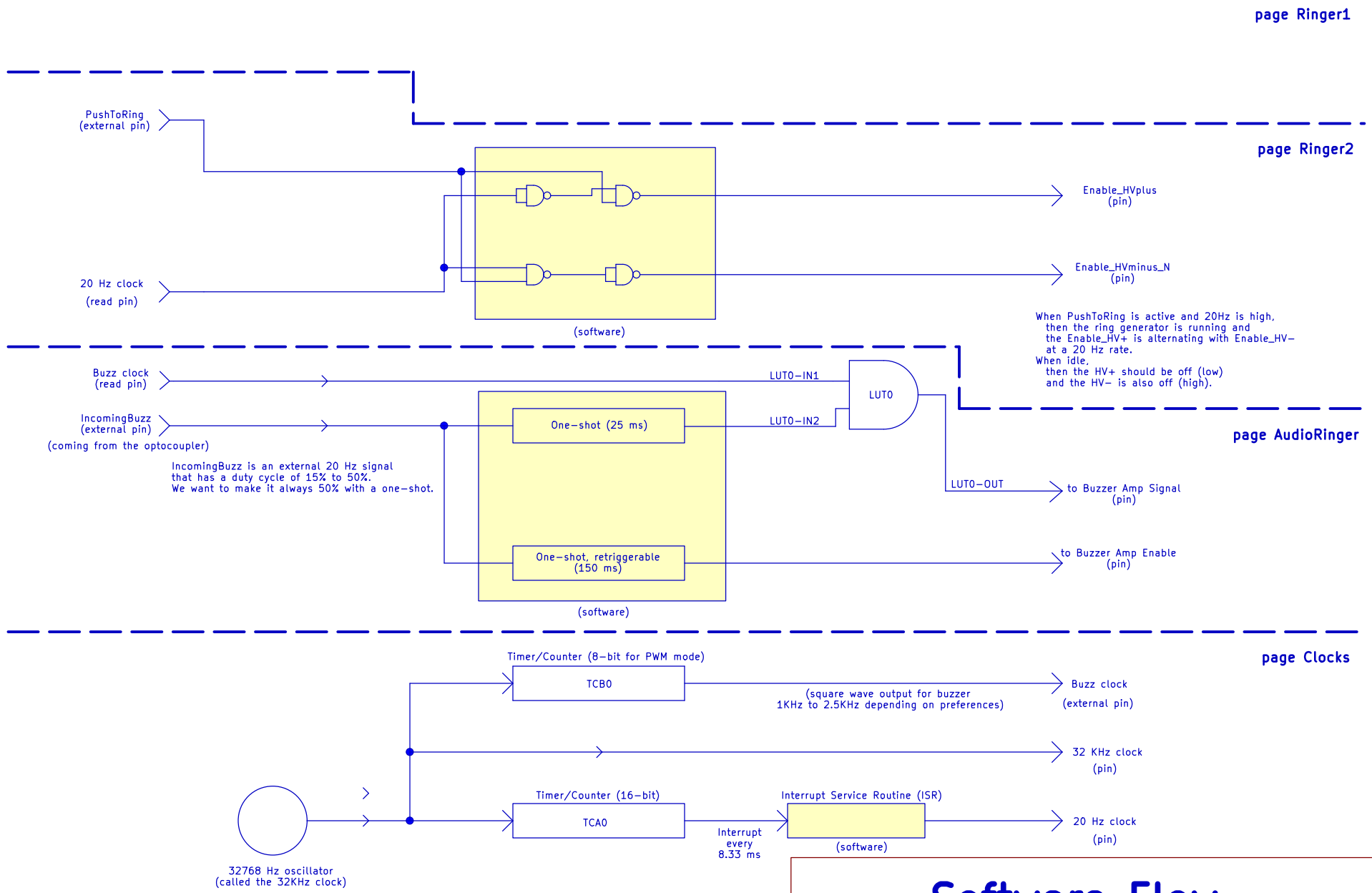

Blocks in light yellow are functions
implemented in software.

Software Flow

Sheet: /Software Flow/
File: Clock2.kicad_sch

(page 10)

Title:

Size: USLetter	Date:	Rev:
KiCad E.D.A. 9.0.0		Id: 10/11

This page is an graphic equalizer, except it only controls two bands and the gain and Q are fixed. For more info:

An audio circuit collection, Part 3
Texas Instruments
https://www.ti.com/lit/pdf/slyt134

Simple, Easy Parametric and Graphic EQ's, Plus Peaks and Notches
http://www.geofex.com/article_folders/eqs/paramet.htm

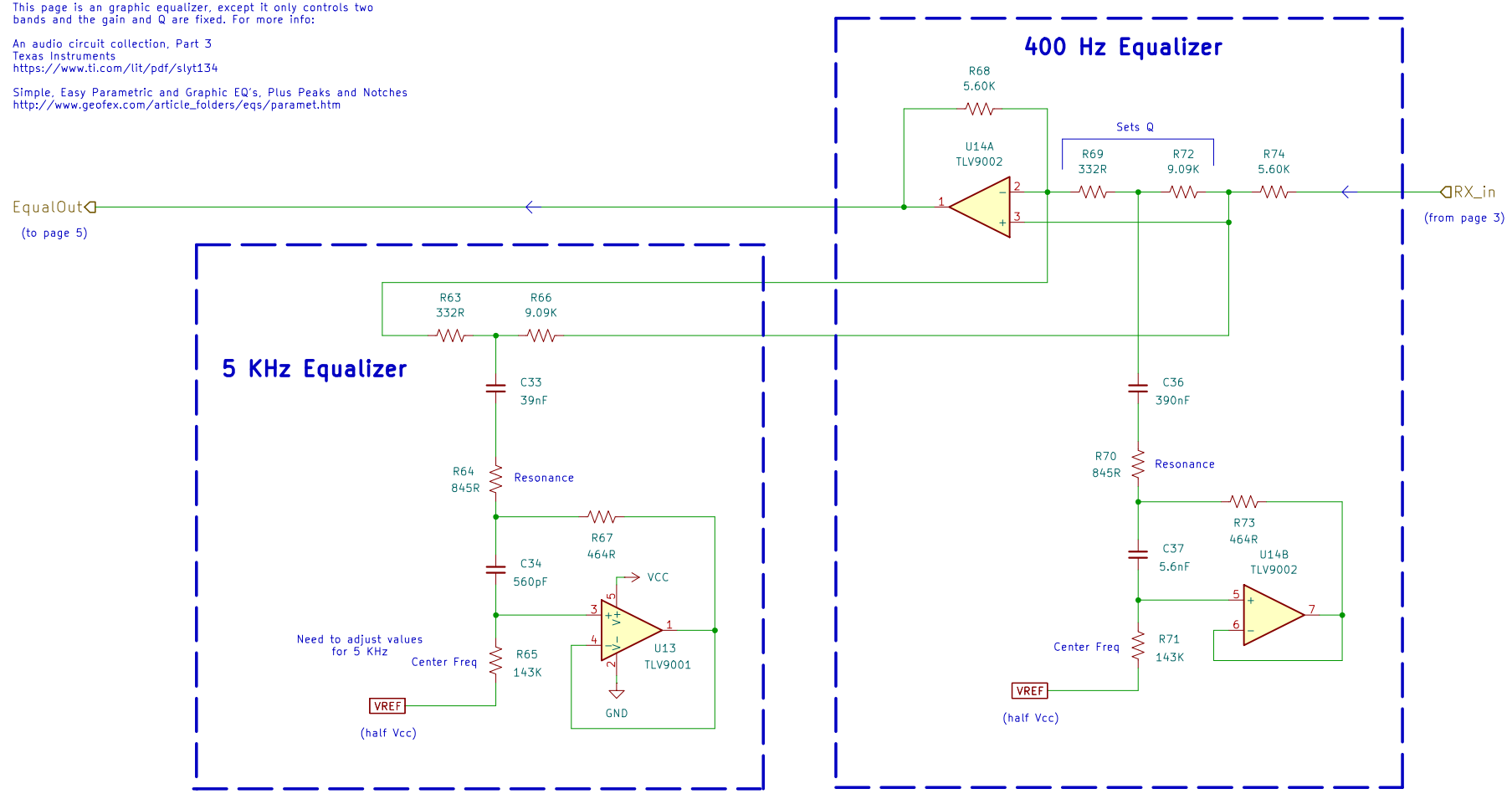

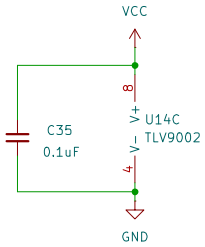

TLV9001: 5.5V, noise = 27, Iq = 77 uA (max)

TLV9002: 5.5V, noise = 27, Iq = 75 uA (max) per amplifier

Unless noted otherwise, all resistors are 0805 SMD, 1%.
Capacitors are 0805 SMD.

RX Equalizer

Sheet: /Equalizer/
File: Equalizer.kicad_sch (page 11)

Title:

Size: A4 | Date: | **Rev:**
KiCad E.D.A. 9.0.0 | Id: 11/11